CYIENT

Integrating Product Manufacturing Information (PMI)-Driven Master Model Method for Enhanced Manufacturing Process Optimization

Implementing effective process practices to strengthen manufacturability, improve production performance, and reduce machine downtime.



Contents

01 Abstract

01 Introduction

04 Challenges in Traditional Manufacturing Workflows

05 Digitalization of legacy data to well-defined manufacturing process

06 Integration of PMI-Driven Master Model Method

07 PMI linked NX-NC Programs & Simulation

08 Advantages of PMI-Driven Master Model Integration

09 Conclusion

09 About the Author

10 About Cyient

Abstract

Manufacturers in sectors such as Gas Turbine, Steam Turbine, Generators, Heavy Machinery, and Aerospace operate under sustained pressure to deliver faster, improve quality, and control costs—without disrupting active shop-floor operations. Repeated errors, delayed timelines, and fragmented data flows are no longer viable in competitive manufacturing environments.

This white paper examines how manufacturing organizations can transition from legacy, document-heavy workflows to a more integrated, **Product Manufacturing Information** (PMI) driven Master Model approach. It outlines practical methods to improve product quality, shorten lead times, and reduce operational risk by strengthening digital continuity, while respecting existing production setups and workforce practices.

Introduction

Traditional drawing-centric workflows, largely dependent on 2D documentation, are increasingly unable to support rapid iteration, multi-disciplinary collaboration, precision manufacturing, and end-to-end lifecycle traceability. As product complexity grows, interpretation gaps become inevitable, turning ambiguity into a persistent source of errors, rework, and production delays.

To reduce this risk, manufacturers are accelerating the adoption of Model-Based Definition (MBD) and Model-Based Engineering (MBE) approaches. These methodologies improve clarity, by embedding product and manufacturing intent directly within the 3D model, enabling more reliable downstream execution.

However, the shop floor still reflects the transition in progress. Manufacturing teams often rely on multiple sources of technical documentation and production data to build each component. NC programmers and operators may need to reference engineering drawings, process spreadsheets, process drawings, masking drawing, routings, machine setup sheets, fixture and tooling details, raw material availability, and NC program punch files and manuscripts. The accuracy, consistency, and accessibility of these inputs directly influence machining quality, first-time-right production, and overall throughput.

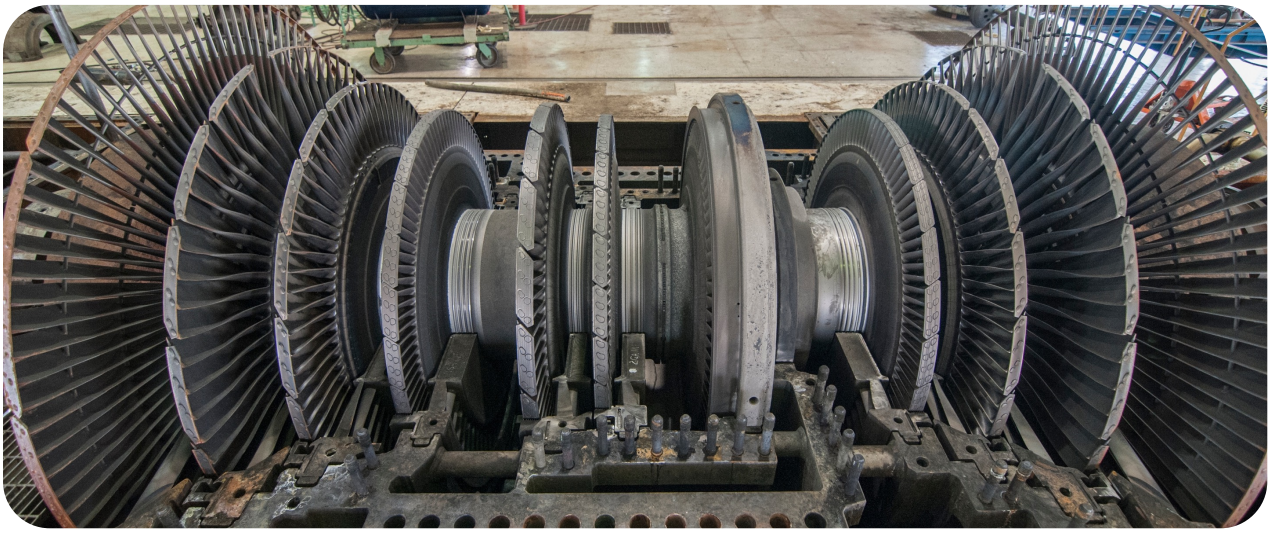

Challenges in Traditional Manufacturing Workflows

Despite advances in digital manufacturing, many workflows remain heavily document-driven and vulnerable to human error. The final component quality and reliability often depend on individual experience, manual verification, and the timely availability of accurate data at the point of NC programs creation.

When information is distributed across disconnected documents, systems, and formats, inconsistencies and omissions become difficult to detect. This fragmentation creates operational bottlenecks, raises the risk of machining errors, and undermines both efficiency and production quality. These challenges highlight the pressing need for improved data integration and streamlined workflows within modern manufacturing environments.

Below is a pictorial representation of the various materials typically required, along with their sources, and highlights the challenges manufacturers face when managing and consolidating this information. It underscores the need for improved data integration and streamlined workflows to reduce errors, enhance efficiency, and strengthen overall production quality.

Engineering Drawing

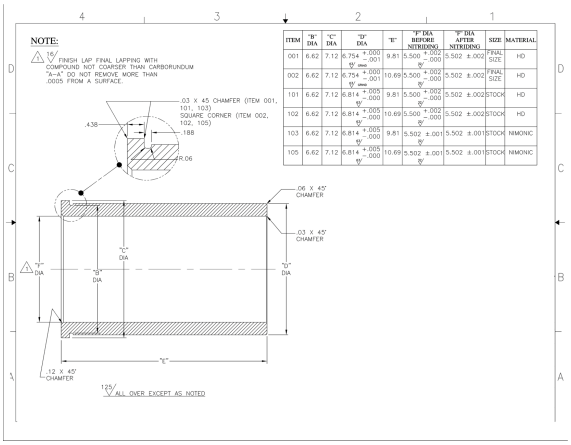

Masking Drawing

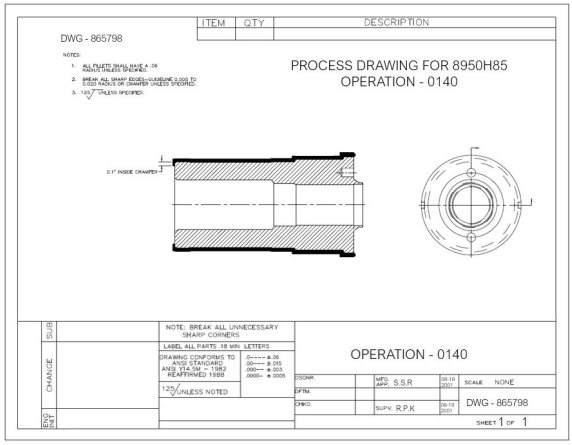

Process Drawing

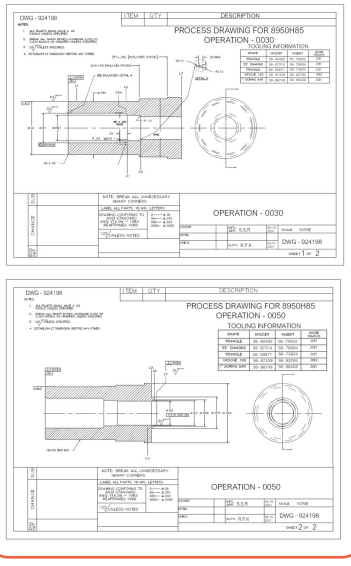

Process Excel

PROCESS SHEET BUSHING — STYLE: 8950H85 — ITEM: 006 — REV: C

PROCESS DRAWING: DWG 8950H85006

Oper	Description	Var	Value	Tolerance
_010	CUTOFF SAW	LT	8.350	(+/-.060)
		SD	4.600	(REF)
_030	TURN UP TO L3 +.130" .	A1	4.027	(+.005/-.000)
		B1	1.833	(+.001 -.000)
		DBA	4.238	(+/-.010)
		D1	4.230	(+/-.010)
		D2	5.260	(+/-.010)
		L1	0.750	(+/-.010)
		L2	4.020	(+/-.010)
		L3+.130"	#REF!	(+/-.010)
		OR 1	3.850	(+/-.010)
		RE 1	1.525	(+/-.002)
		LT	8.160	(+/-.005)
		F1-.06"	7.080	(+/-.010)
		THRD ST K	4.320	(+/-.010)
_050	TURN OR4 TO LT	B2	1.586	(+.001 -.000)
		B3	1.660	(+/-.005)
		D3	0.360	(+/-.010)
		L5	0.360	(+/-.010)
		L6	0.225	(+/-.010)
		LT	8.100	(+/-.005)
		OR 4	4.350	(+/-.010)
		OR 5	2.290	(+/-.010)
		OR 6	1.800	(+/-.010)
_080	DRILL HOLES AND MILL SLOTS	LT	8.200	(REF)
		L5	#REF!	(REF)
		D dia B.C.	#REF!	(+/-.005)
		0.25	0.250	(+/-.015)
		0.13	0.130	(+/-.015)
		0.375	0.375	(+.006-.000)
		0.5	0.500	(+/-.015)
_120	GRIND BEFORE NITRIDE	LT	8.300	(REF)
		B1	1.833	(+.001 -.000)
		B2	1.596	(+.001 -.000)
_160	GRINDE AFTER NITRIDE	LT	8.210	(REF)
		B1	1.855	(+.001 -.000)
		B2	1.598	(+.001 -.000)
		RE 1	1.756	(+/-.002)
_180	THREAD AND GROOVE	L3	4.890	(+/-.010)
		L4	6.780	(+/-.010)
		LT	8.110	(REF)
		THD	4"x8	GO/NOGO GAGE

Routing

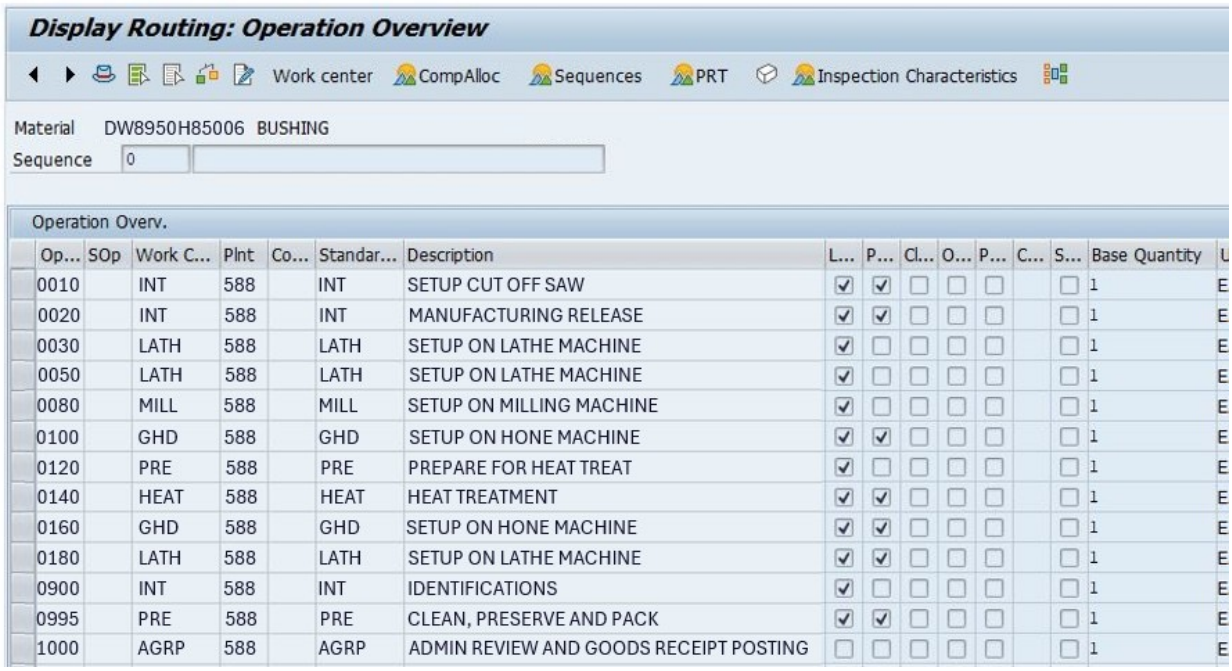

Display Routing: Operation Overview

Work center | CompAlloc | Sequences | PRT | Inspection Characteristics

Material DW8950H85006 BUSHING
Sequence 0

Operation Overv.

Op...	SOp	Work C...	Plnt	Co...	Standar...	Description	L...	P...	Cl...	O...	P...	C...	S...	Base Quantity	U
0010		INT	588		INT	SETUP CUT OFF SAW	☑	☑	☐	☐	☐		☐	1	E
0020		INT	588		INT	MANUFACTURING RELEASE	☑	☑	☐	☐	☐		☐	1	E
0030		LATH	588		LATH	SETUP ON LATHE MACHINE	☑	☐	☐	☐	☐		☐	1	E
0050		LATH	588		LATH	SETUP ON LATHE MACHINE	☑	☐	☐	☐	☐		☐	1	E
0080		MILL	588		MILL	SETUP ON MILLING MACHINE	☑	☐	☐	☐	☐		☐	1	E
0100		GHD	588		GHD	SETUP ON HONE MACHINE	☑	☑	☐	☐	☐		☐	1	E
0120		PRE	588		PRE	PREPARE FOR HEAT TREAT	☑	☐	☐	☐	☐		☐	1	E
0140		HEAT	588		HEAT	HEAT TREATMENT	☑	☑	☐	☐	☐		☐	1	E
0160		GHD	588		GHD	SETUP ON HONE MACHINE	☑	☑	☐	☐	☐		☐	1	E
0180		LATH	588		LATH	SETUP ON LATHE MACHINE	☑	☑	☐	☐	☐		☐	1	E
0900		INT	588		INT	IDENTIFICATIONS	☑	☐	☐	☐	☐		☐	1	E
0995		PRE	588		PRE	CLEAN, PRESERVE AND PACK	☑	☑	☐	☐	☐		☐	1	E
1000		AGRP	588		AGRP	ADMIN REVIEW AND GOODS RECEIPT POSTING	☐	☐	☐	☐	☐		☐	1	E

As shown in the image above, several manufacturing environments have critical data scattered across local systems, shared servers, SAP databases, and engineering drawing repositories managed either by customers or internal teams & NC programmers. Before machining begins, operators must verify that the drawing revisions match the NC program revisions. Any mismatch requires production to stop while updated data is located or approvals are obtained interruptions that directly affect throughput, confidence, and quality. This operational reality highlights the need for a more unified and reliable method of managing manufacturing data.

Digitalization of Legacy Data into a Defined Manufacturing Process

A Master Model represents a single, authoritative digital definition of the product, containing not only geometry, but all information required to manufacture, inspect, and maintain it.

When enriched with Product Manufacturing Information (PMI), including operation sequences, GD&T, tolerances, material specifications, surface finishes, and manufacturing notes, the model becomes a highly actionable dataset. It supports automation, improves consistency, and reduces reliance on manual interpretation.

This white paper explores the integration of a PMI-driven Master Model method, to strengthen digital continuity and operational efficiency.

At Cyient, this approach was implemented by developing PMI-enabled Master Models along with operation-wise stage models. These were integrated with PLM platforms to synchronize stage models, machine setup drawings, punch files, and NC manuscripts in a defined, centralized location. The result is a structured process that shortens lead times, reduces errors, minimizes machine downtime, and improves production quality, by aligning human expertise with intelligent digital systems.

Integration of PMI-Driven Master Model Method

PMI-driven Master Model & Stage models are 3D CAD representations that combine geometric with embedded manufacturing annotations. Together, they serve as a **single source of truth** for downstream activities.

Key Elements

01 **3D Geometry**
Parametric, feature-based, and fully constrained.

02 **Semantic PMI**
Feature-linked annotations such as GD&T, datums, tolerances, and surface finish requirements.

03 **Metadata**
Material designations, revision identifiers, configuration data.

04 **Associative Relationships**
Automatic propagation of changes across dependent models and processes.

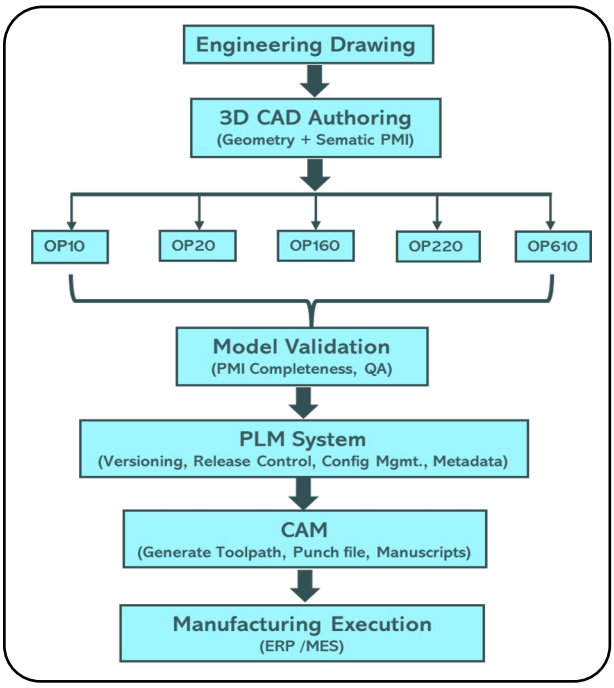

PMI- Master Model

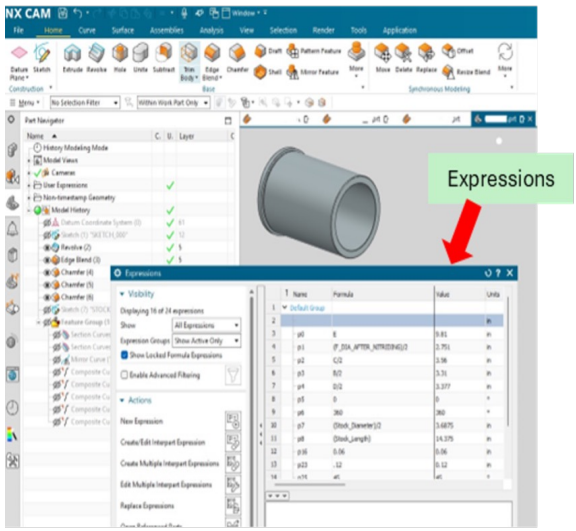

Stage Model

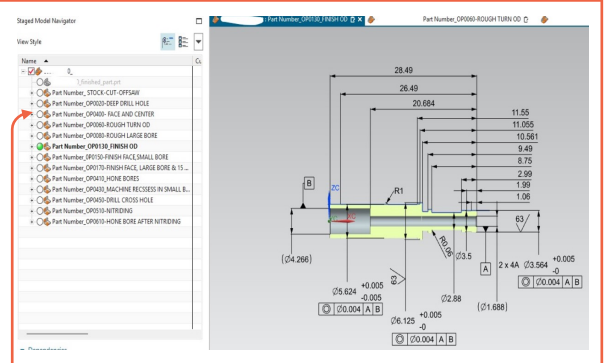

Stage Models Navigator

Stage Model

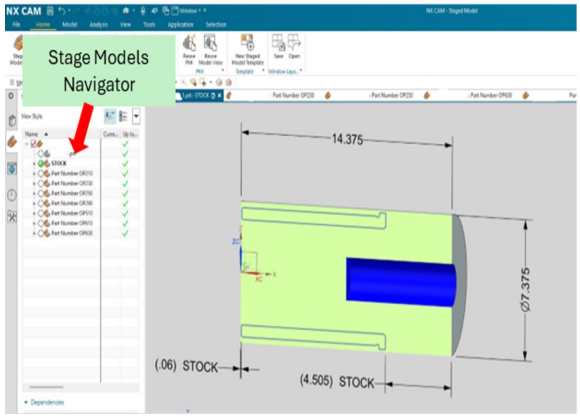

PMI linked NX-NC Programs & Simulation

PMI-driven stage models eliminate the need for separate manufacturing drawings, providing a richer and more precise representation of product intent. All stage models remain associatively linked to the Master Model, ensuring that any design updates are automatically reflected downstream.

Toolpaths and cut regions update in real time, with notifications provided to NC engineers through the Operation Navigator. Before releasing programs to the shop floor, NC programmers review and repost updated files, ensuring accuracy and alignment with the latest model revisions.

This automated and associative approach reduces manual intervention, lowers rework risk, and improves collaboration between engineering and manufacturing teams. By maintaining a single source of truth, manufacturers strengthen traceability, consistency and execution confidence across the product lifecycle.

NX-NC Fite

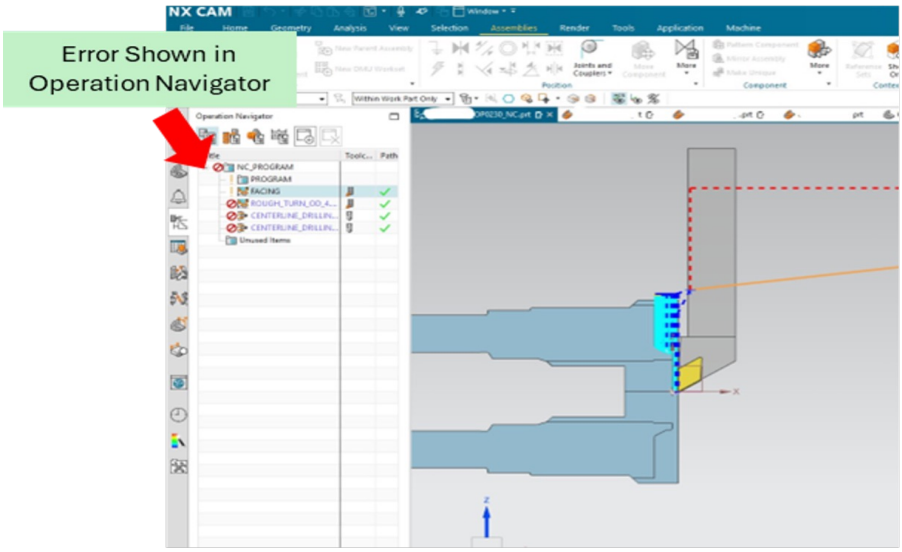

Machine /Punch File

```
%_N_DIN_LT100089_SPF
;$PATH=/_N_TKE_DIR
;(POST: LATHE_6 LT)
;(04/26/18 04:57)
;(LT100089)
N1 M91=1234
N6 M99
N11 M96
N16 G70
N21 G54
N26 G40
N31 G95
N36 M5
N41 M9
N46 M0
;(TOOL CHANGE: TOOL 1)
;TOOL NAME = 56-45128
;TOOL DESCRIPTION = DNMG-432, GRADE = KCM25, TOOL RAD = .031 #56-78385
N51 UYKFGSFFD(1,1)
N56 ;(***** START TOOL #01)
N61 G26 S900
N66 G96 S400 M03
N71 G00 X16.5 Z1.0
N76 M08
N81 G54
;(TOOL CHANGE: TOOL 1)
N86 UYKFGSFFD(1,1)
N91 G54

;(ROUGH_TURN_A2_DIA)
;(TOOL NAME = 56-45128)
;(TOOL DESCRIPTION = DNMG-432, GRADE = KCM25, TOOL RAD = .031 #56-78385)
;(TIP RADIUS = 0.031 IN. )
```

Manuscript File

```
LT100089  DW8950H85006  C  OP0030  DATE: 09/28/24 06:57  PAGE: 1


                    NN      NN  XX      XX      PPPPP      OOOOO      SSSSS   TTTTTTTT
                    NNN     NN   XX    XX      PPPPPPP    OOOOOOO    SSSSSSS  TTTTTTTT
                    NNNN    NN    XX  XX       PP    PP  OO     OO  SS           TT
                    NN NN   NN     XXXX        PP    PP  OO     OO  SS           TT
                    NN  NN  NN      XX         PPPPPPP   OO     OO   SSSSSSS     TT
                    NN   NN NN     XXXX        PPPPPP    OO     OO         SS    TT
                    NN    NNNN    XX  XX       PP        OO     OO  SS     SS    TT
                    NN     NNN   XX    XX      PP         OOOOOOO   SSSSSSSS     TT
                    NN      NN  XX      XX     PP          OOOOO     SSSSSS      TT


                  ************************************************************************
                                    PROGRAMMER  : Unknown
                  ************************************************************************

                         CONFIRM THE FOLLOWING MATCH ON THE N/C PROGRAM FILE

                                 DATE / TIME : 09/28/24 06:57

                                 FILE NAME   : LT100089

                       IF ANY OF THE ABOVE DOES NOT MATCH, DO NOT RUN PROGRAM
                              CONTACT PROGRAMMER AND CONFIRM DISCREPANCY

                  ************************************************************************
                  ************************************************************************
♠LT100089  DW8950H85006   C  OP0030  DATE: 09/28/24 06:57  PAGE: 2
                                                                                  X        Z
 FEED   RPM
%_N_DIN_LT100089_SPF                                                            0.0000    0.0000
   0.0    0
```

Advantages of PMI-Driven Master Model Integration

The integration of a PMI-driven Master Model delivers significant advantages across the entire organization.

1. Design / Engineering:

- Higher initial effort for the first component with up to **70% reduction in effort** for subsequent components
- Eliminates the need to maintain parallel 2D drawings
- Ensures a single source of truth for geometry and PMI
- Reduces design-to-manufacturing communication gaps
- Speeds up design changes through associative model updates
- Supports MBD/MBE initiatives for future digital workflows

2. Process Planning / Manufacturing Engineering:

- Similar 70% effort reduction after initial setup Minimizes time spent reviewing legacy documents (drawings, spreadsheets, routings, long text)
- Automatically updates stage models when the Master Models change
- Reduces manual errors in defining operations and tolerances
- Improves consistency and repeatability across part families
- Simplifies process documentation and model-based planning

3. NC Programming:

- After first part establishment, **working hours reduce by up to 80%** for additional parts
- Toolpaths and cut regions update automatically with model revisions
- Provides change notifications in the Operation Navigator
- Reduces time-consuming manual checks and reposting cycles
- Ensures only validated data reaches the shop floor

4. Quality / Inspection:

- Access to precise 3D PMI improves clarity in inspection planning
- Supports better traceability for audits and compliance
- Reduces inspection cycle time through consistent and standardized data

5. Production / Shop Floor Operations:

- Receives updated NC programs aligned with latest revisions
- Reduces machine downtime caused by data mismatches
- Improves first-time-right machining results
- Builds operator confidence in engineering data

6. PLM / Data Management:

- Enhances version control and reduces duplication
- Improves integration with ERP, MES, CAM, and QMS systems
- Supports digital thread and digital twin initiatives
- Enables long-term data traceability



Conclusion

The shift from traditional drawing-centric processes to PMI-driven Master Model methodology marks a pivotal advancement in digital manufacturing. The transition from drawing-centric workflows to a PMI-driven Master Model methodology represents a meaningful shift in how manufacturing intelligence is created and consumed.

By replacing fragmented documents and manual verification with a unified, model-based approach, organizations reduce variability, strengthen execution confidence, and improve operational efficiency across engineering, manufacturing, and quality teams.

This integration is not merely a technical enhancement. It is an outcome-driven strategy that combines human expertise with intelligent digital systems, shortening lead times, improving quality, reducing costs, and enabling scalability across part families.

As manufacturers face growing demands for speed, precision, and compliance, those who embrace PMI-driven, model-based practices will be better positioned to compete and sustain performance in an increasingly digital manufacturing landscape.



About Cyient

Cyient is a global lifecycle engineering services company powering mission-critical industries from design to aftermarket across products, plants, and networks. With 300+ customers and 15,000+ associates across 30+ countries, we combine human expertise, deep domain knowledge, and AI to deliver intelligent engineering for every lifecycle across Aerospace and Rail, Automotive and Mobility, Connectivity, Energy, Healthcare, Mining, Utilities, and beyond.

To learn how we deliver outcomes that matter, and nothing less, visit www.cyient.com

Follow us on:

Contact us

North America Headquarters
Cyient, Inc.
99 East River Drive
5th Floor
East Hartford, CT 06108
USA
T: +1 860 528 5430
F: +1 860 528 5873

Europe, Middle East, and Africa Headquarters
Cyient Europe Limited
Apex, Forbury Road,
Reading
RG1 1AX
UK
T: +44 118 3043720

Asia Pacific Headquarters
Cyient Limited
L14 3 Parramatta Square,
153 Macquarie St,
Parramatta NSW 2150,
Australia
T: +61 2 8887 8600

Global Headquarters
Cyient Limited
Plot No. 11
Software Units Layout
Infocity, Madhapur
Hyderabad - 500081
India
T: +91 40 6764 1000
F: +91 40 2311 0352

© 2026 Cyient. Cyient believes the information in this publication is accurate as of its publication date; such information is subject to change without notice. Cyient acknowledges the proprietary rights of the trademarks and product names of other companies mentioned in this document.